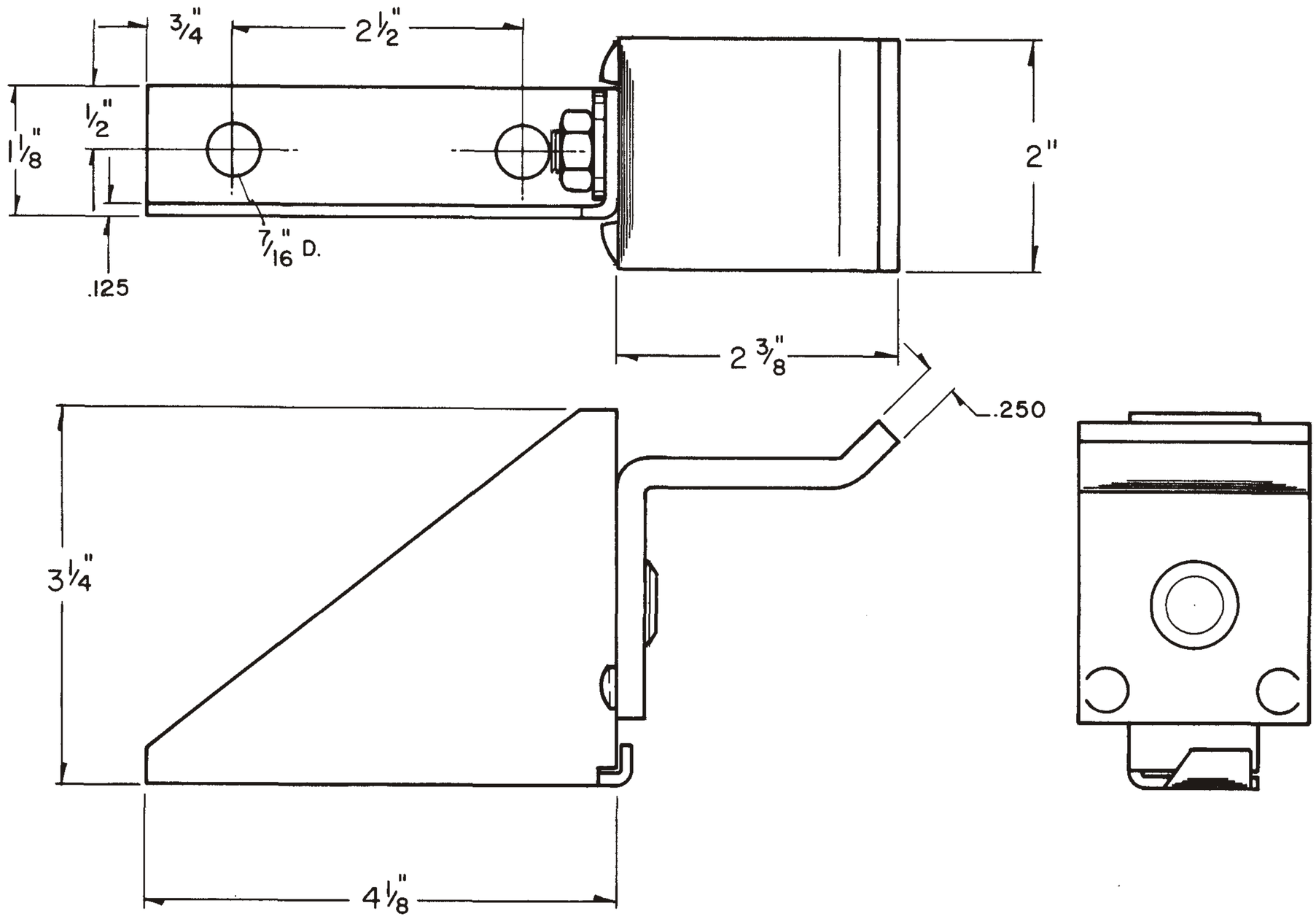

Dimensions shown are nominal and subject to change. For critical design specification, contact techinfo@natman.com

©2000 National Manufacturing Co.