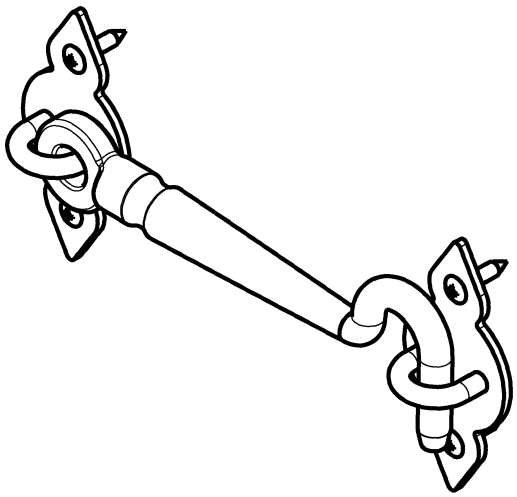

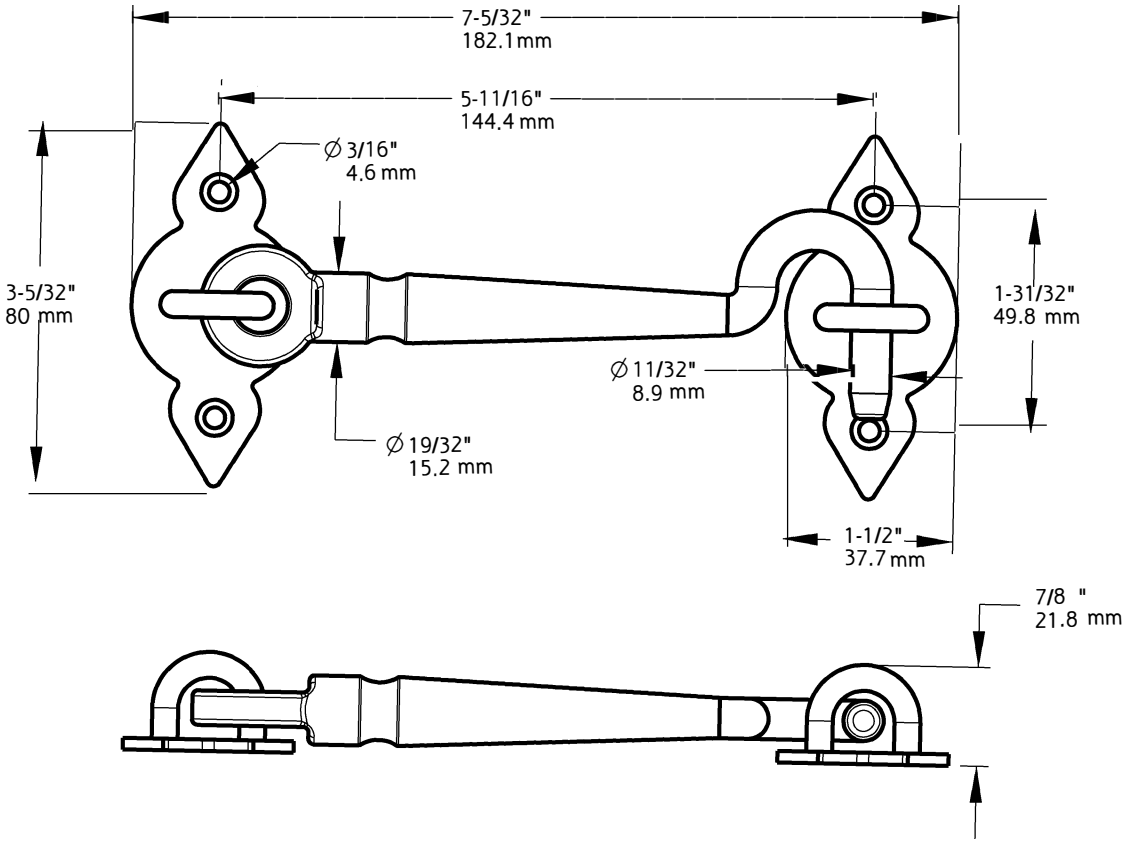

SKU No.	FINISH
N100-054	BLACK

Material: Steel
Fasteners: (4) #8 X3/4", Oval Head, Type AB, Tapping Screw

1 Revision	DO NOT SCALE	V2101 Family Name	See Table SKU
June 2021 Date	Dimensions are nominal and subject to change. ©2021 Spectrum Brands, Inc.	HOOK, GATE, SPEAR, 6" Description	