N800-014

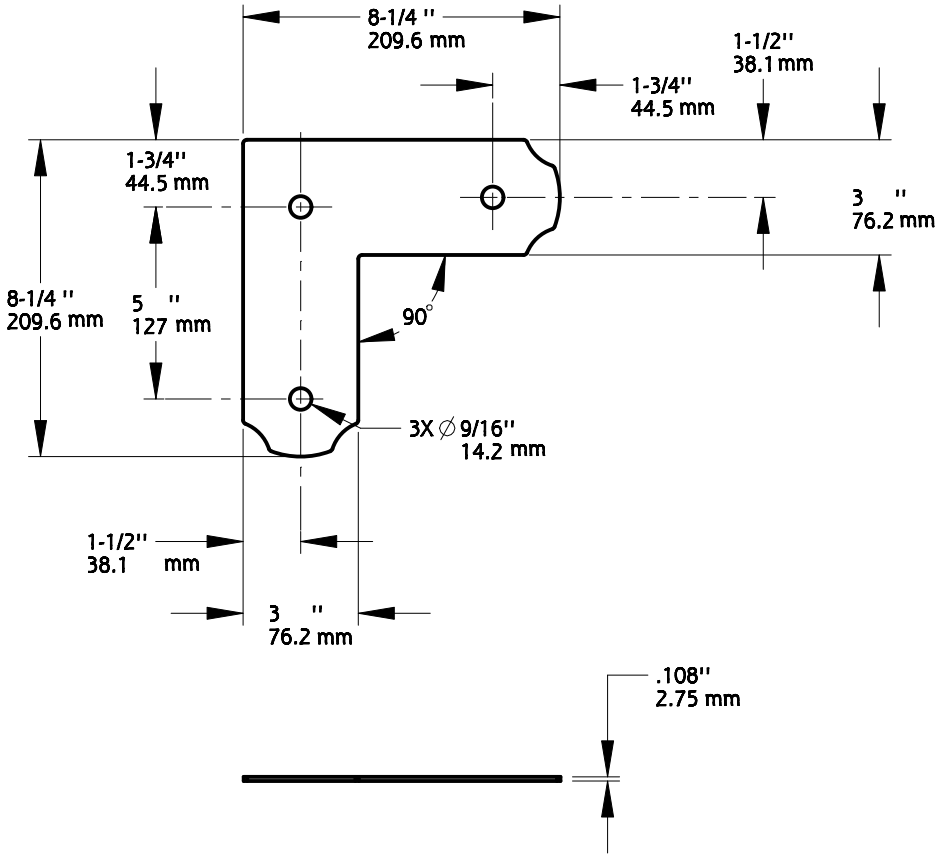

Material: Steel
Finish: E-coat + black powder coat
Fasteners: N800-022 = 1/2" x 3" or equal

1 Revision	DO NOT SCALE	1178BC Family Name	N800-014 SKU
December 2019 Date	Dimensions are nominal and subject to change. ©2019 Spectrum Brands, Inc.		L-STRAP PLATE Description